FORM No. I.

See A-53-22

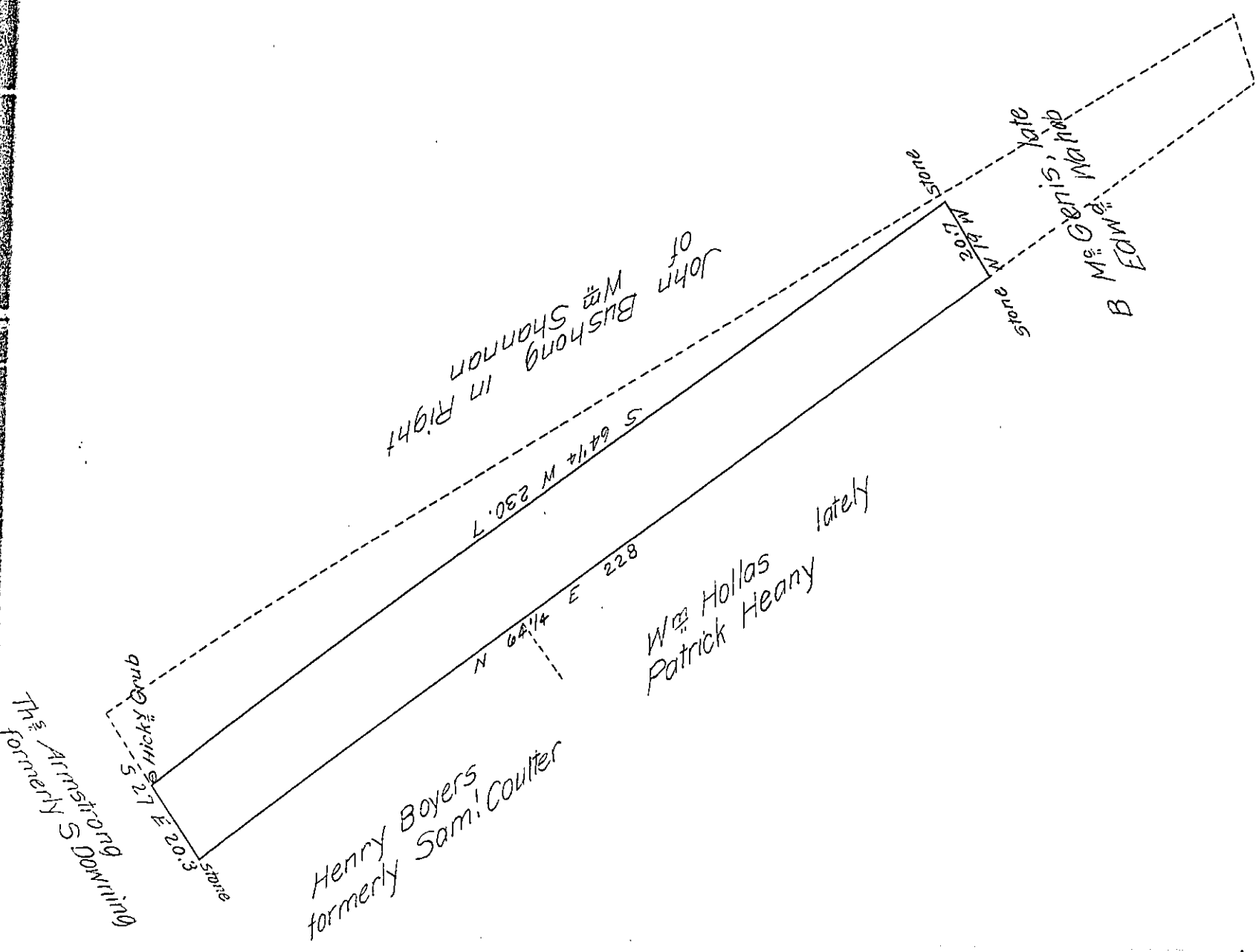

The above Draught made by the black lines. Contain 27 acres and 5 perches and the Usual Allowance of Six per Ct for Roads &c and is the S.W. part of a Tract of Land of 46 a 113 p of Land in Bart township Lancaster County, granted to Samuel Paxtang by Warrant dated the 11th day of October A.D. 1753. And now Surveyed for John Lightner Esq the 12th day of March 1840

To J. Salade Esq Survey General Pennsylvania

By James Calwell D.S.

IN TESTIMONY that the above is a copy of the original remaining on file in the Department of Internal Affairs of Pennsylvania, made conformably to an Act of Assembly approved the 16th day of February, 1833, I have hereunto set my Hand and caused the Seal of said Department to be affixed at Harrisburg, this twentyninth *day of* May *1906*

Isaac B. Brown

Secretary of Internal Affairs.